465-3020
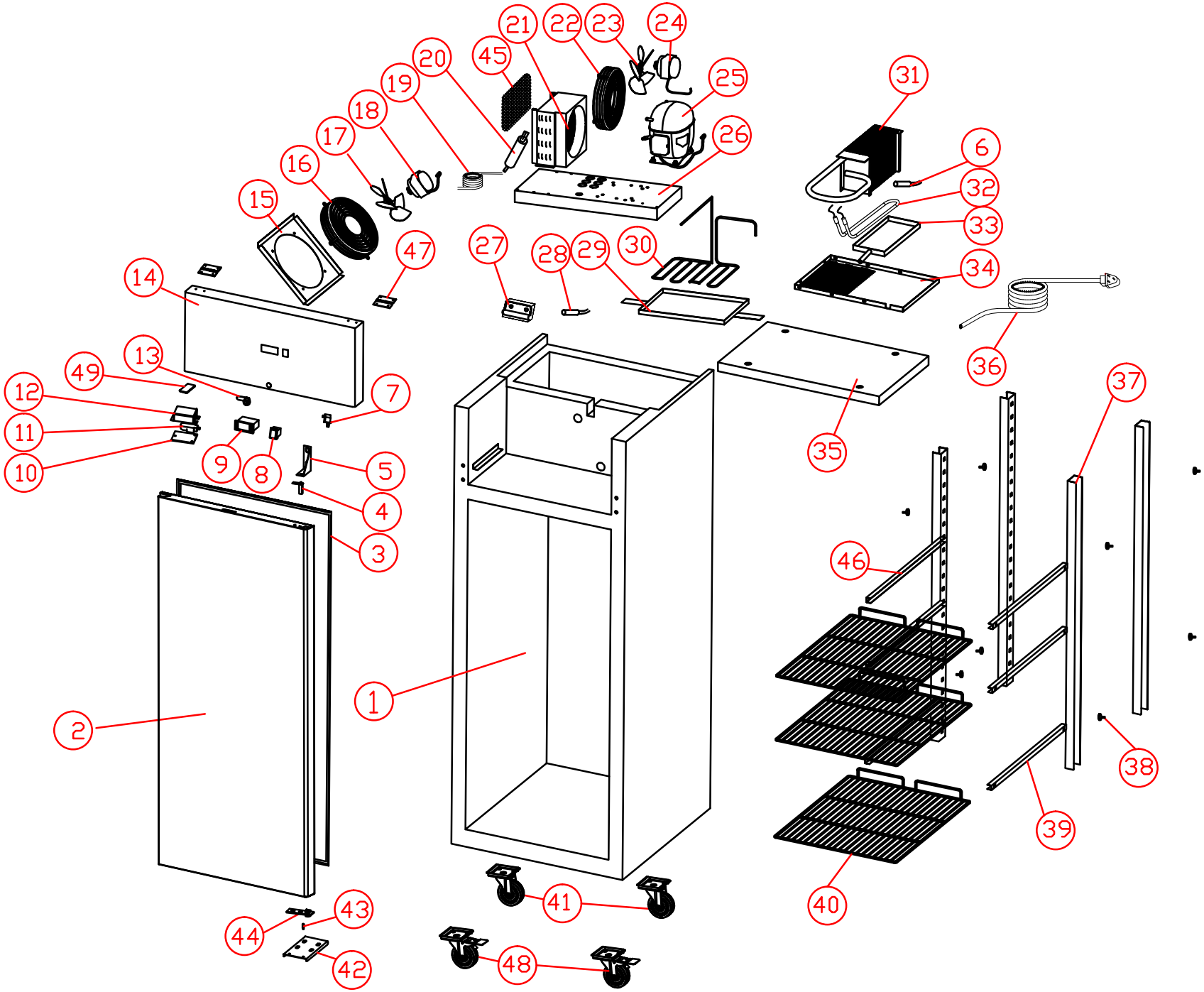
EXPLODED VIEW